AMEREC™ AK Series w/K30 Control Owners Manual

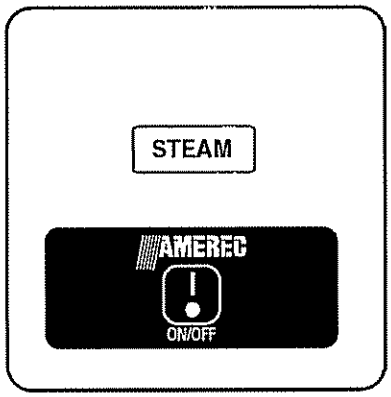

AMEREC STEAMBATH GENERATORS (MODELS: AK5, AK7, AK10 with K30 CONTROL)

FOR THE SAFETY OF YOU AND YOUR FAMILY PLEASE READ THE WARNINGS TO THE RIGHT AND ALL INSTRUCTIONS BEFORE USING YOUR STEAMBATH.

POST "STEAMBATH INSTRUCTIONS" LABEL OUTSIDE STEAMBATH FOR SAFETY WARNINGS.

SAVE THIS MANUAL

Thank you for purchasing your new AMEREC steam generator. If we can be of any assistance do not hesitate to call our Service Department at **1-800-331-0349**.

WARNING

Electric Shock Hazard - High voltage exists within this equipment. There are no user serviceable parts in this equipment. All installation and service to this equipment should be performed by qualified licensed personnel.

Do not exceed 30 minutes in a steambath. Excessive exposure can be harmful to your health. Excessive exposure can produce a rapid pulse, light-headedness, weakness or fainting. If you become uncomfortable or experience any of the above conditions exit the steambath immediately.

Steambaths can put stress on the body. Therefore a steambath should be used only under a doctor's direction if you:

Are pregnant
Have a heart condition
Have high blood pressure
Have circulatory problems
Are under the influence of alcohol
Are under the influence of drugs
Have diabetes
Are under the care of a physician
Are in generally poor health

Children should only use the steambath under close adult supervision.

Scald Hazard: Do Not Touch the steam head or trim during operation as they are HOT. Stay at least 12 inches away from the hot steam escaping from the steam head.

Be careful when entering a steambath. Escaping steam from an overheated steam room may cause injury.

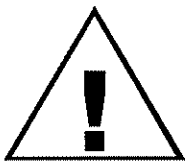

steamsauna.com Bathing Inspired Wellness

SECTION 1: STEAM GENERATOR OVERVIEW

The K-30 model steam generator control features a 30 minute press on timer lighting up the word "STEAM" and a thermostatic control preset to reach 120 degrees Fahrenheit. The primary control can be mounted either inside or outside the steam room and an optional 2nd control is available to mount in an alternate location. The preset temperature can be adjusted in a range between 100 degrees and 125 degrees Fahrenheit. Once the set temperature is reached the "soft steam" feature automatically engages cutting steam production back to a single element to provide softer billowing steam during more of the steam bath. If the steam room temperature drops more than 5 degrees both elements will automatically engage.

SECTION 2: OPERATION OF YOUR K30 CONTROL

1. Be sure the power circuit and water supply to the generator are on.

2. Firmly press the ON/OFF button on the control until the word "STEAM" lights up.

3. The generator should produce steam in 5 to 10 minutes and will turn off automatically in 30 minutes. You may also press the control a second time to turn off the "STEAM" light and shut down the generator.

4. If you wish to change the preset temperature see the instructions in section 3.

5. Wait for the steam room to reach a comfortable temperature.

6. Remove clothing and jewelry.

7. Enter the steam room and close the door to prevent steam from escaping.

8. Enjoy the warm steam releasing tense muscles and refreshing the entire body.

9. If your steam room has a shower, a pleasant experience can be achieved by taking a warm shower with the steam.

10. After a steambath a warm shower will give you a feeling of relaxation and is conducive to a good night's rest. A cold shower will refresh you and is a good way to start a busy day or prepare you for an evening out.

SECTION 3: TEMPERATURE ADJUSTMENT

1. To adjust the set temperature remove the snap-on decorative control cover by lifting from the bottom as shown in diagram #1. (If an optional second control is connected only the "primary" control plugged, into connector J7, can be used to adjust the temperature).

2. Using a small slotted screw driver turn the adjustment pot in the desired direction. See diagram #2. One quarter turn equals approximately 5 degrees of temperature change. Caution: Over stressing the adjustment pot can damage the control.

3. Snap the control cover plate back on by sliding the top of the cover plate onto the control housing and pushing on the bottom of the control cover plate. See diagram #3. The new temperature setting will become effective the next time the steam is turned on.

DIAGRAM 1

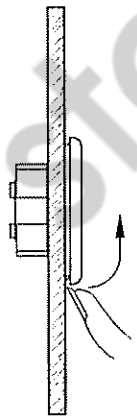

DIAGRAM 2

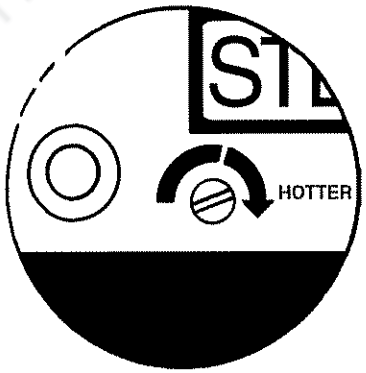

DIAGRAM 3

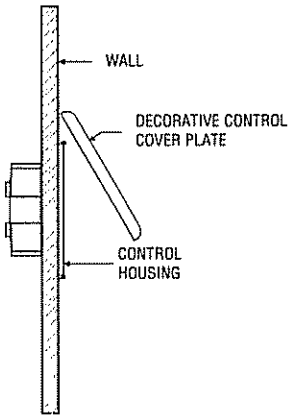

steamfoundbath Bathing Instead of Weeping

SECTION 4: MAINTENANCE OF YOUR AK STEAM GENERATOR

The steam generator, steam head, fittings and plumbing connections should be inspected regularly for water leaks and damage. The AK steam generator is equipped with a manual drain valve for flushing sediments from the generator tank. This procedure should be scheduled monthly or more often depending on local water conditions and steam bath usage.

Flushing Procedures:

1. The generator should be cool.
2. Press the control ON.
3. Open the manual drain valve.
4. The unit will drain without heating the water.
5. Allow the water to run for a full 10 minutes.
6. Push the control OFF. When the water stops flowing out the drain, close the manual drain valve.

SECTION 5: TROUBLE SHOOTING GUIDE

The troubleshooting guide is meant as a general aid only. There are no user serviceable parts in the generator. All repairs should be performed by a qualified service person. For additional assistance or the number of the factory authorized service person nearest you call AMEREC's Service Department at **1-800-331-0349**.

SYMPTOMS	PROBABLE CAUSES	ACTION TO BE TAKEN
Control won't turn "ON"	No power to the generator	1. Verify that the circuit breaker is on.
Control "ON" No Steam	No water to the generator or Faulty control or Faulty generator	1. Wait at least 10 minutes after turning on the control. 2. Verify that the water is on. 3. Verify that the generator drain valve is closed. 4. Turn circuit breaker off and wait 30 seconds. Turn back on and recheck. 5. If the above 4 steps do not disclose the problem turn off the generator's circuit breaker and call AMEREC's Service Department.
Control "OFF" Unit still makes steam	Faulty control or Faulty generator	1. Turn off the circuit breaker. 2. Call AMEREC's Service Department.
Control flashing	Error signal	1. Call AMEREC's Service Depratment.
Water runs out of steam head	Faulty generator	1. Turn off the circuit breaker. 2. Turn off the water. 3. Call AMEREC's Service Department.
Steam room too hot or cold	Temperature adjustment needs setting	1. See Section 3, "Temperature Adjustment". 2. Call AMEREC's Service Department.
Sudden increase in rate water sputters out of steam head	Foaming contaminants in the water supply	1. Flush tank 3 times. See Section 4, "Flushing Procedure".

continued ☛

steamsaunabath Refining Inspired Wellness

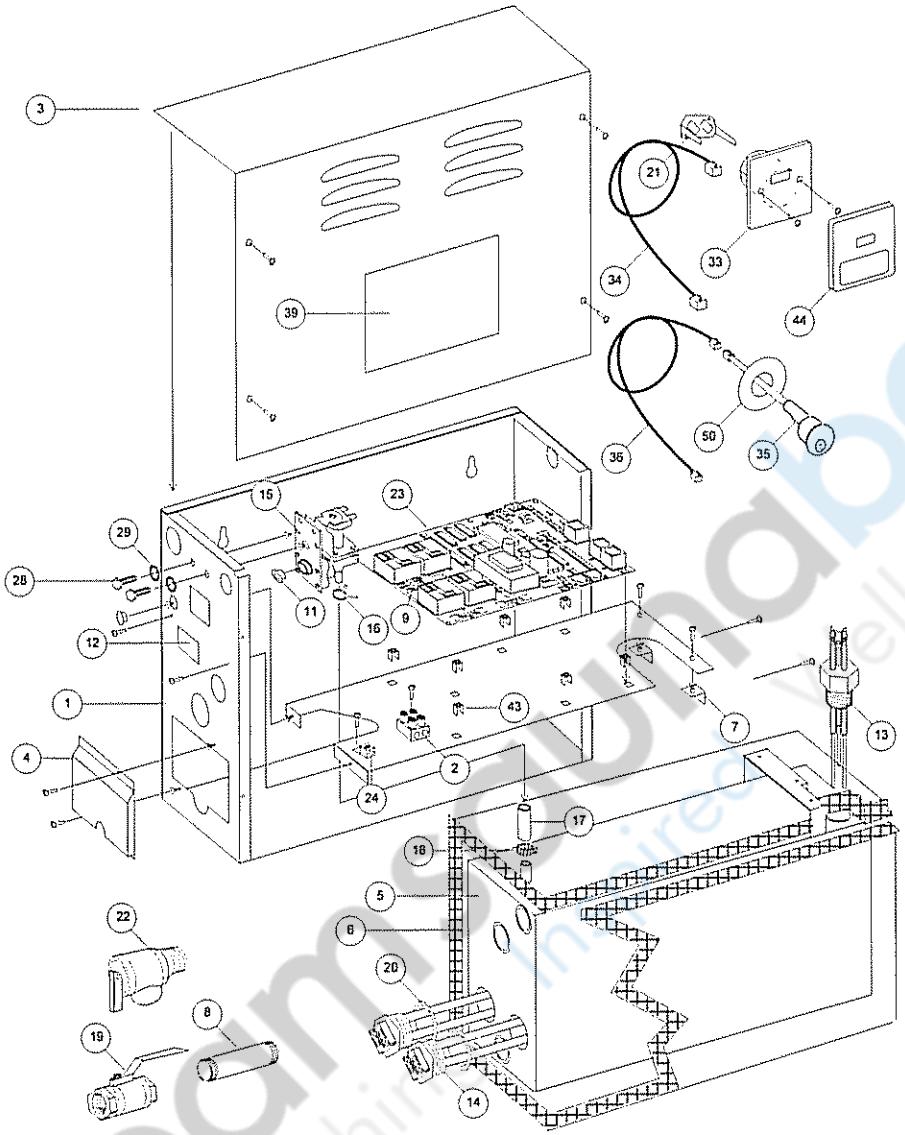

NUMBER	PART NAME	DESCRIPTION
1	FRAME	CHASSIS
2	TERMINAL	POWER INPUT TERMINAL BLOCK
3	COVER	FRONT WITH WD LABEL
4	COVER	ELEMENT ACCESS
5	TANK	TWO ELEMENTS
6	INSULATION	BLANKET
7	BRACKET	L BRACKET
8	NIPPLE	DRAIN NIPPLE
9	TERMINAL	OPTIONAL AUTO FLUSH TERMINAL BLOCK
11	CAP	CAP, THREAD PROTECTOR
12	LABEL	UL RATING
13	PROBE	TRIPLE LEVEL
14	ELEMENT	REPLACEABLE ELEMENT
15	VALVE	WATER INLET
16	CLAMP	SELF-TIGHTENING
17	HOSE	WATER
18	CLAMP	AUGER
19	VALVE	MANUAL DRAIN
20	GASKET	ELEMENT
21	BRACKET	MOUNTING BRACKET
22	VALVE	PRESSURE RELIEF
23	PCA	PRINTED CIRCUIT ASSEMBLY, AK
24	LUG	GROUND

28	BOLT	1/4-20 x 1/2"
29	WASHER	1/4" LOCK
33	CONTROL HOUSING	CONTROL HOUSING
34	CABLE	CONTROL CABLE
35	SENSOR	TEMPERATURE SENSOR
36	CABLE	TEMPERATURE SENSOR CABLE
37	STEAM HEAD	DISPERSION HEAD (NOT SHOWN)
38	PLACARD	SAFETY (NOT SHOWN)
39	LABEL	WIRE DIAGRAM
40	FUSES	15/100 SLO-BLO (NOT SHOWN)
41	FUSES	3A SLO-BLO (NOT SHOWN)
43	STANDOFF	METAL STAND OFF
44	COVERPLATE	DECORATIVE CONTROL COVER PLATE
50	TRIM RING	OPTIONAL TRIM RING

AMEREC™
SAUNA & STEAM
P.O. Box 2258, Woodinville WA 98072
425-951-1120 Fax: 425-951-1130
email address: amerec @ amerec .com

steamsaunabath
Inspired Wellness

AMEREC™ AK Series w/K60 Control Owners Manual

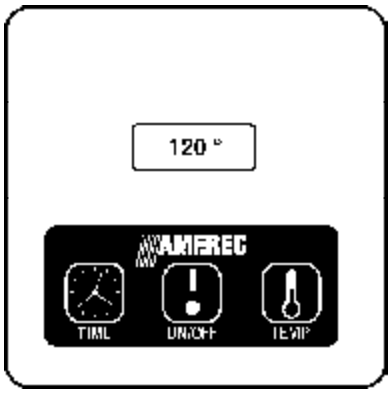

AMEREC STEAMBATH GENERATORS
(MODELS: AK5, AK7, AK10 w/K60 CONTROL)

FOR THE SAFETY OF YOU AND YOUR FAMILY PLEASE READ THE WARNINGS TO THE RIGHT AND ALL INSTRUCTIONS BEFORE USING YOUR STEAMBATH.

POST "STEAMBATH INSTRUCTIONS" LABEL OUTSIDE STEAMBATH FOR SAFETY WARNINGS.

SAVE THIS MANUAL

Thank you for purchasing your new AMEREC steam generator. If we can be of any assistance do not hesitate to call our Service Department at **1-800-331-0349**.

WARNING

Electric Shock Hazard - High voltage exists within this equipment. There are no user serviceable parts in this equipment. All installation and service to this equipment should be performed by qualified licensed personnel.

Do not exceed 30 minutes in a steambath. Excessive exposure can be harmful to your health. Excessive exposure can produce a rapid pulse, light-headedness, weakness or fainting. If you become uncomfortable or experience any of the above conditions exit the steambath immediately.

Steambaths can put stress on the body. Therefore a steambath should be used only under a doctor's direction if you:

Are pregnant
Have a heart condition
Have high blood pressure
Have circulatory problems
Are under the influence of alcohol
Are under the influence of drugs
Have diabetes
Are under the care of a physician
Are in generally poor health

Children should only use the steambath under close adult supervision.

Scald Hazard: Do Not Touch the steam head or trim during operation as they are HOT. Stay at least 12 inches away from the hot steam escaping from the steam head.

Be careful when entering a steambath. Escaping steam from an overheated steam room may cause injury.

steamsauna.com Bathing Inspired Wellness

SECTION 1A: STEAM GENERATOR OVERVIEW

The standard K60 model steam generator control features an adjustable 60 minute time and temperature control with digital display. The actual room temperature and time remaining are alternately displayed every 5 seconds. The primary control can be mounted either inside or outside the steam room and an optional secondary control is available to mount in an alternate location. The temperature can be adjusted in a range between 100 degrees and 125 degrees Fahrenheit with an initial default of 120 degrees. Once the set temperature is reached the ''soft steam'' feature automatically engages cutting steam production back to a single element to provide softer billowing steam during more of the steam bath. If the steam room temperature drops more than 5 degrees both elements will automatically engage.

SECTION 1B: STEAM GENERATOR OVERVIEW - CELSIUS AND 24 HOUR OPTIONS

As an option your K60 control can be ordered with a Celsius and/or 24 hour timer in place of the Fahrenheit and 60 minute standard. The Celsius option's adjustable temperature range is between 38 degrees and 52 degrees Celsius, with an initial default of 49 degrees. The 24 hour timer option is adjustable in 1 hour increments from 1 to 24 hours. Other features of the K60 control should operate as described in section 2 below with the above noted exceptions.

SECTION 2: OPERATION OF YOUR K60 CONTROL

1. Be sure the power circuit and water supply to the generator are on.

2. Press the ON/OFF button on the control until the temperature is displayed.

3. The generator should produce steam in 5 to 10 minutes and will turn off automatically in 60 minutes or less depending on the set time. The control will alternately display time remaining and the actual temperature at the sensor in your steam room every 5 seconds.

4. To change the time setting press and hold the TIME button on the control. Continuing to hold the button will cause the time to increase in 5 minute increments from the prior setting. At 60 minutes the time setting will scroll backwards to 5 minutes. To shut down the generator press the ON/OFF button.

5. To change the preset temperature setting press and hold the TEMP button on the control. While continuing to hold the button, the temperature display will increase in 1 degree increments from the prior setting to 125 degrees Fahrenheit. At 125 degrees Fahrenheit the temperature setting will decrease in 1 degree increment to the lowest setting, 100 degrees Fahrenheit.

6. The TIME and TEMP set points are remembered by the K60 for your next bath unless power to the steam generator is lost.

SECTION 3: TAKING A STEAMBATH

1. Wait for the steam room to reach a comfortable temperature.

2. Remove clothing and jewelry.

3. Enter the steam room and close the door to prevent steam from escaping.

4. Relax and enjoy the warm steam releasing tense muscles and refreshing the entire body.

5. If your steam room has a shower a pleasant experience can be achieved by taking a warm shower with the steam.

6. After a steambath a warm shower will give you a feeling of relaxation and is conducive to a good night's rest. A cold shower will refresh you and is a good way to start a busy day or prepare you for an evening out.

SECTION 4: MAINTENANCE OF YOUR AK STEAM GENERATOR

The steam generator, steam head, fittings and plumbing connections should be inspected regularly for water leaks and damage. The AK steam generator is equipped with a manual drain valve for flushing sediments from the generator tank. This procedure should be scheduled monthly or more often depending on local water conditions and steam bath usage.

Flushing Procedures:

1. The generator should be cool.

2. Press the control ON.

3. Open the manual drain valve.

4. The unit will drain without heating the water.

5. Allow the water to run for a full 10 minutes.

6. Push the control OFF. When the water stops flowing out the drain, close the manual drain valve.

steamsauna bath Bathing Inspired Wellness

SECTION 5: TROUBLE SHOOTING GUIDE

The troubleshooting guide is meant as a general aid only. There are no user serviceable parts in the generator. All repairs should be performed by a qualified service person. For additional assistance or the factory authorized service person nearest you call: AMEREC's Service Department at **1-800-331-0349.**

SYMPTOMS	PROBABLE CAUSES	ACTION TO BE TAKEN
Control won't turn "ON". (Control light off).	Improper power supplied (no power). or Control improperly connected. or Control cable is faulty. or Contol is faulty.	1. a. Make sure circuit breaker is "ON". b. Using a voltmeter, check the voltage across the two fuses on the "PCA" printed circuit assembly. Voltage should be 208V / 240V. c. Check fuses, if the fuse(s) are blown, replace with Buss# MDL 15/100 or equivalent fuse. If the fuse blows again - call AMEREC's Service Department. 2. Check control(s) installed per Section 6-5 in the AK INSTALLATION AND SERVICE INSTRUCTIONS. 3. Replace control cable - call AMEREC's Service Department. 4. Replace the control - Call AMEREC's Service Department.
Control "OFF". Unit still makes steam.	Generator is faulty.	1. Turn off the circuit breaker. 2. Call AMEREC's Service Department.
Water runs out of steam head.	Generator is faulty.	1. Turn off the circuit breaker. 2. Turn off the water. 3. Call AMEREC's Service Department.
Steam room too hot or cold.	Temperature adjustment needs setting.	1. See Section 3, "Temperature Adjustment". 2. Call AMEREC's Service Department.
Control "ON". K60 Control displays "E001".	Temperature sensor not connected.	1. Check that the sensor cable is connected to J4 on the PCA printed circuit assembly. 2. Check the cable connection to the temperature sensor. 3. Replace sensor and/or cable - call AMEREC's Service Department.
Control "ON". K60 Control displays "E002".	Temperature sensor. or cable shorted.	1. Check sensor cable for damage from nail/staple puncture. 2. Check sensor cable ends for frayed/exposed wire strands. 3. Replace sensor and/or cable - call AMEREC's Service Department.
Control "ON". K60 Control displays ">>>º".	Steambath temperature over 132 º. or Sensor/cable is faulty.	1. If bath is too hot, shut off circuit breaker and call AMEREC's Service Department. 2. Treat as "E002" fault above.
Control won't turn "OFF". (Control light on).	Control is faulty.	1. Replace the control - call AMEREC's Service Department.
Control "ON". (Control light on) Unit won't steam. Note: Time/Temp properly. displayed on K60.	Unit has not filled completely. or Generator is faulty.	1. Wait at least 10 minutes after turning on the control. 2. Call AMEREC's Service Department.
Unable to adjust Time or Temp setting with K60.	Control is faulty. or Generator is faulty.	1. Replace control - call AMEREC's Service Department. 2. Replace PCA - call AMEREC's Service Department.
Sudden increases in rate water sputters out of steam head.	Foaming contaminants in the water supply.	1. Flush tank 3 times. See Section 4.

steamsauna bath Inspired Wellness Bathing

continued ☞

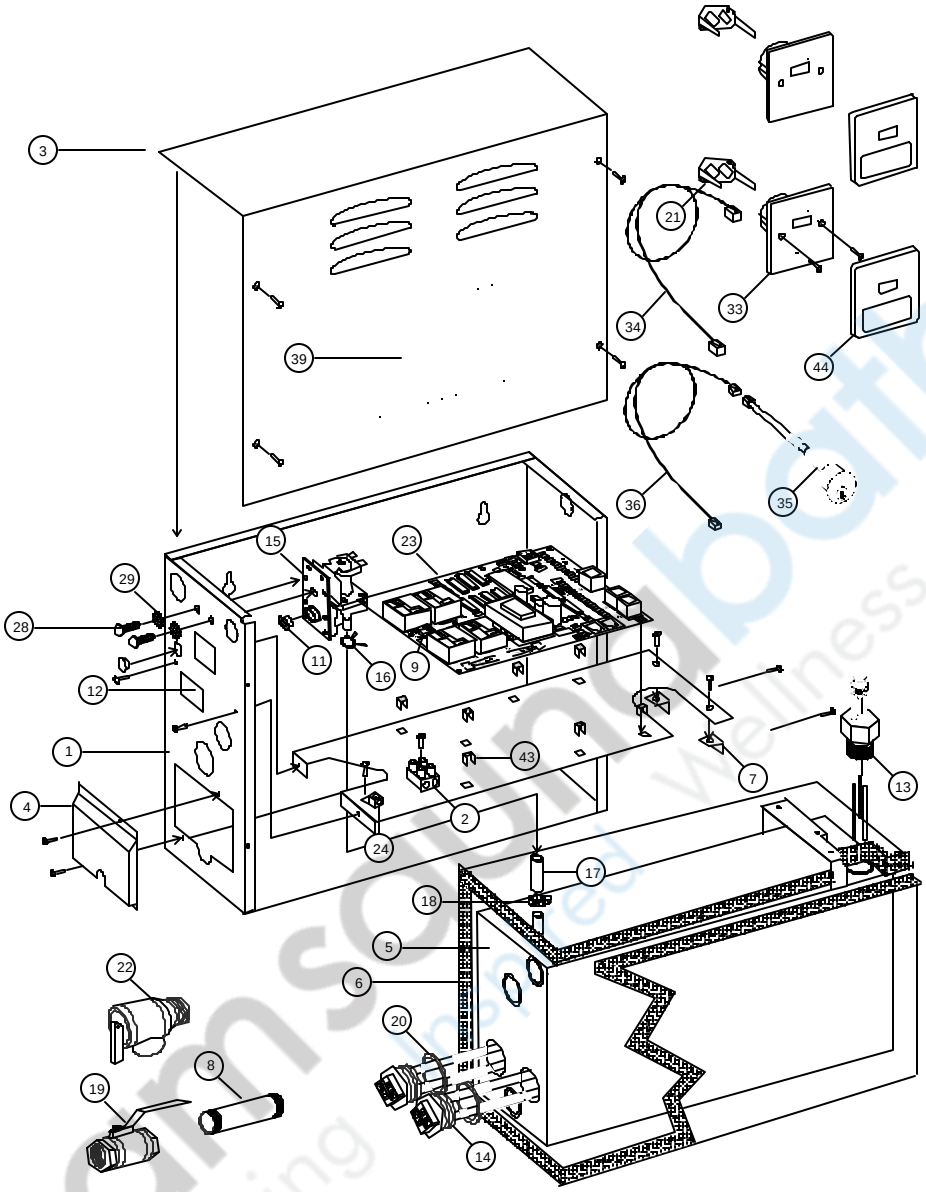

NUMBER	PART NAME	DESCRIPTION
1	FRAME	CHASSIS
2	TERMINAL	POWER INPUT TERMINAL BLOCK
3	COVER	FRONT WITH WD LABEL
4	COVER	ELEMENT ACCESS
5	TANK	TWO ELEMENTS
6	INSULATION	BLANKET
7	BRACKET	L BRACKET
8	NIPPLE	DRAIN NIPPLE
9	TERMINAL	OPTIONAL AUTO FLUSH TERMINAL BLOCK
11	CAP	CAP, THREAD PROTECTOR
12	LABEL	UL RATING
13	PROBE	TRIPLE LEVEL
14	ELEMENT	REPLACEABLE ELEMENT
15	VALVE	WATER INLET
16	CLAMP	SELF-TIGHTENING
17	HOSE	WATER
18	CLAMP	AUGER
19	VALVE	MANUAL DRAIN
20	GASKET	ELEMENT
21	BRACKET	MOUNTING BRACKET
22	VALVE	PRESSURE RELIEF
23	PAL	"BLACK" PRINTED CIRCUIT ASSEMBLY
24	LUG	GROUND

30	BOLT	1/4-20 x 1/2"
29	WASHER	1/4" LOCK
33	CONTROL HOUSING	CONTROL HOUSING
34	CABLE	CONTROL CABLE
35	SENSOR	TEMPERATURE SENSOR
36	CABLE	TEMPERATURE SENSOR CABLE
37	STEAM HEAD	DISPERSION HEAD (NOT SHOWN)
38	PLACARD	SAFETY (NOT SHOWN)
39	LABEL	WIRE DIAGRAM
40	FUSES	15/100 SLO-BLO (NOT SHOWN)
41	FUSES	3A SLO BLO (NOT SHOWN)
43	STANDOFF	METAL STAND OFF
44	COVER PLATE	DECORATIVE CONTROL COVER PLATE

AMEREC SAUNA & STEAM
P.O. Box 2258, Woodinville WA 98072
425-951-1120 Fax: 425-951-1130
email address: amerec@amerec.com