STEAMIST®

Classic AudioSense Speaker Instructions — Model: TSS-CL

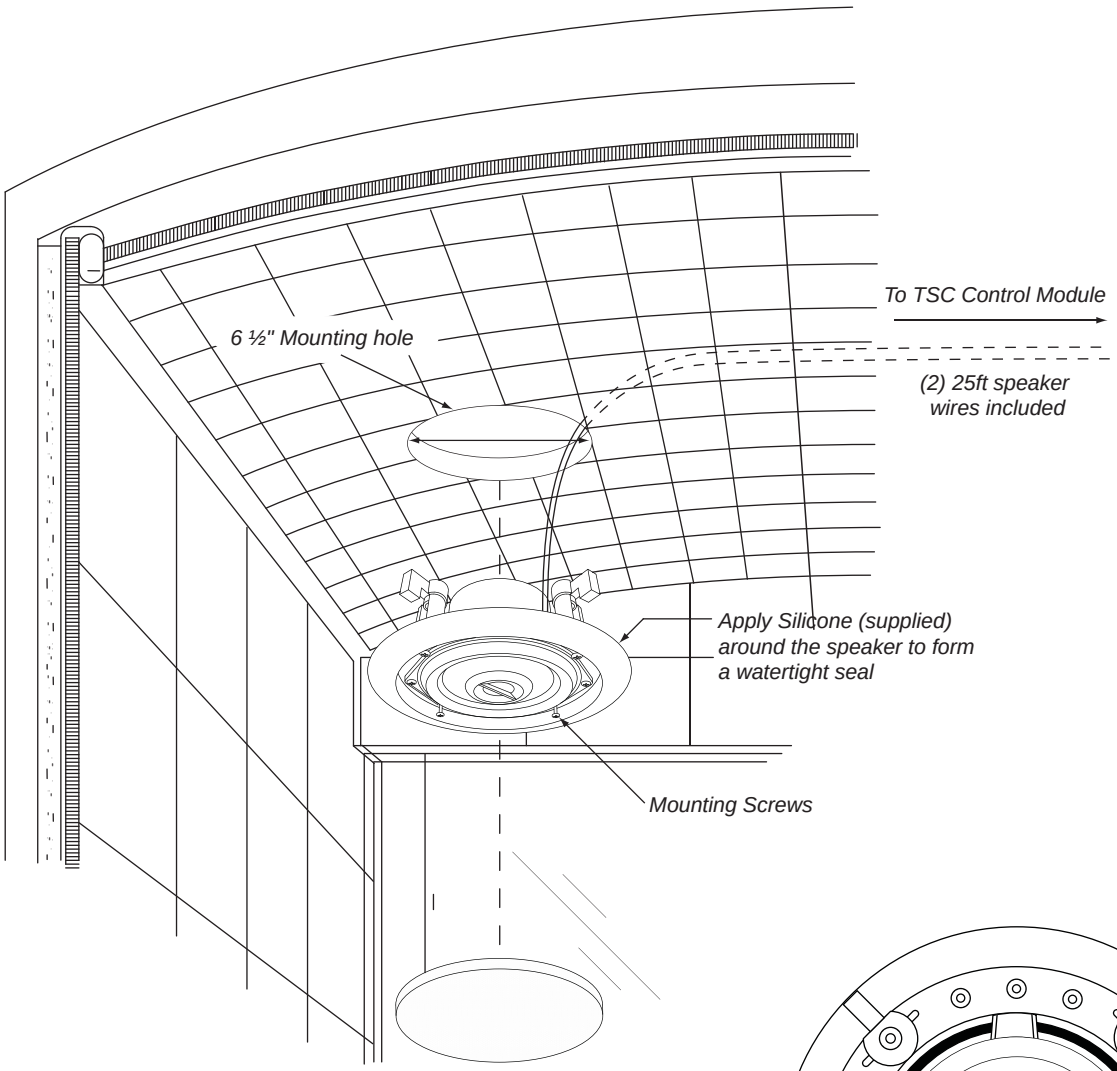

Electrical Connections:

Smaller Connection (-)

Red Connection (+)

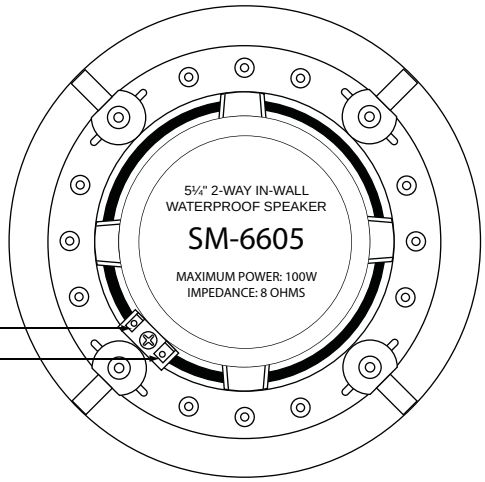

Back of Speaker

NOTE: *To be used in conjunction with the TSC Digital Control Module, ChromaSence option. See separate Pub# 206.*

STEAMIST®
East Coast Office: 25 E. Union Ave., East Rutherford, NJ 07073 • Tel: 800-577-6478 • Fax: 201-933-0746
West Coast Office: 315 W. Pondera St., Suite F, Lancaster, CA 93534 • Tel: 800-355-6478 • Fax: 661-940-1617

STEAMIST®

AudioSense "Classic" Speakers — Model: TSS-CL

Product Information – TSS-CL

5 year parts warranty

Each speaker:

Max power: 100W

Impedance: 8 Ohms

Waterproof

Cone: 5 ¼", 2-way in-wall

Color: white body and trim with white grill.

O.D.: 8"

Grill size: 6-1/4"

Package Includes:

(2) TSS-CL Classic Speakers

(2) 25ft lengths of speaker wire

(2) Silicone Sealant

TSS-CL Classic Speaker

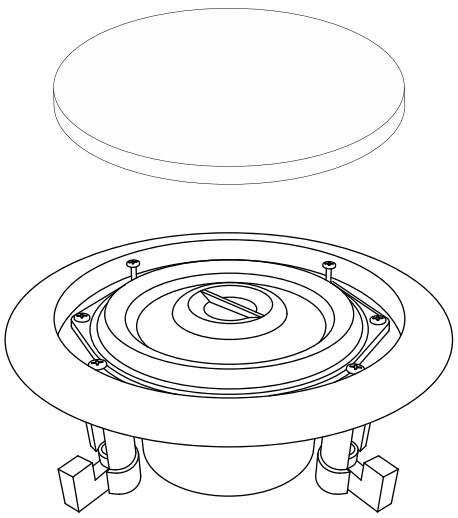

Notes

Installation Notes

Apply Silicone to form watertight seal.

Rough-in Notes

Mounting hole size needed: 6-1/2"
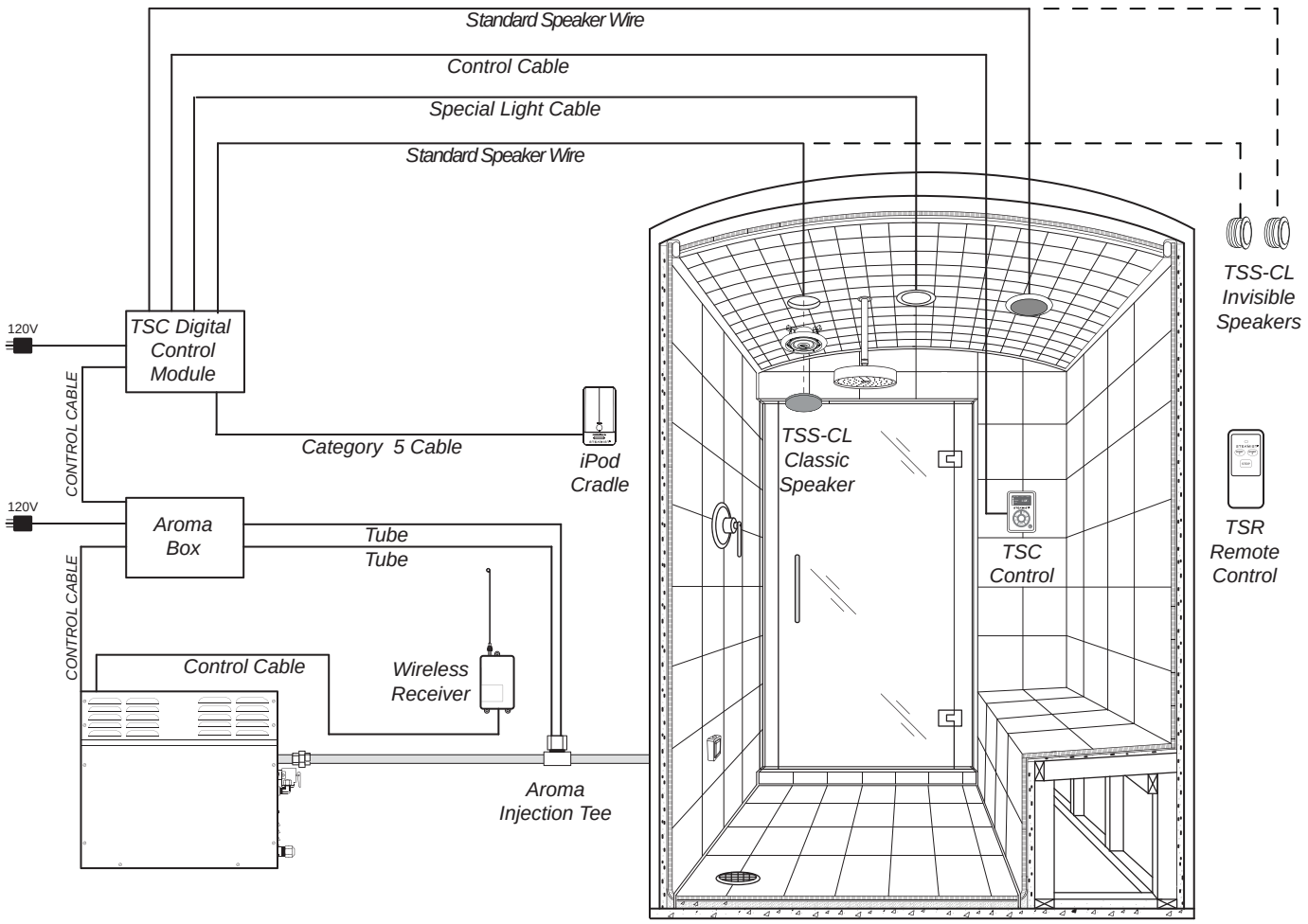
Wiring Layout