Kalliope MTDS-51

60" x 32" x 23.5"

GENERAL SPECIFICATIONS:

Tub Size	60" x 32" x 23.5"
Bathing Well	length: 49" top / 40" bottom width: 22.5" top / 17" bottom depth at overflow: 18.75"
Plumbed Weight	150 lbs / 68.10 kg
Soaker Weight	100 lbs / 45.40 kg
Average Fill	38 gal to above jet level
Maximum Fill	70 gal to overflow
Undermountable	No

NOTE: Filling this tub to the maximum may require an above average size or dedicated water heater.

NOTE: Not recommended as a tub / shower combination.

ELECTRICAL SPECIFICATIONS:

Required Electrical Service	110 Volt
Air Bath or Standard Whirlpool	1-15 amp GFCI
Standard Whirlpool w/Air	2-15 amp GFCI
Ultra-Therapy	2-15 amp GFCI
Ultra-Therapy w/Air	2-20 amp GFCI

CSA Certified C/US; NAHB Certified; ANSI Z124.1 for plastic tubs and ANSI 112.19.7 for whirlpool components.

NOTE: See electrical specifications page for electrical requirements of options.

Shown with Standard Therapy Package.

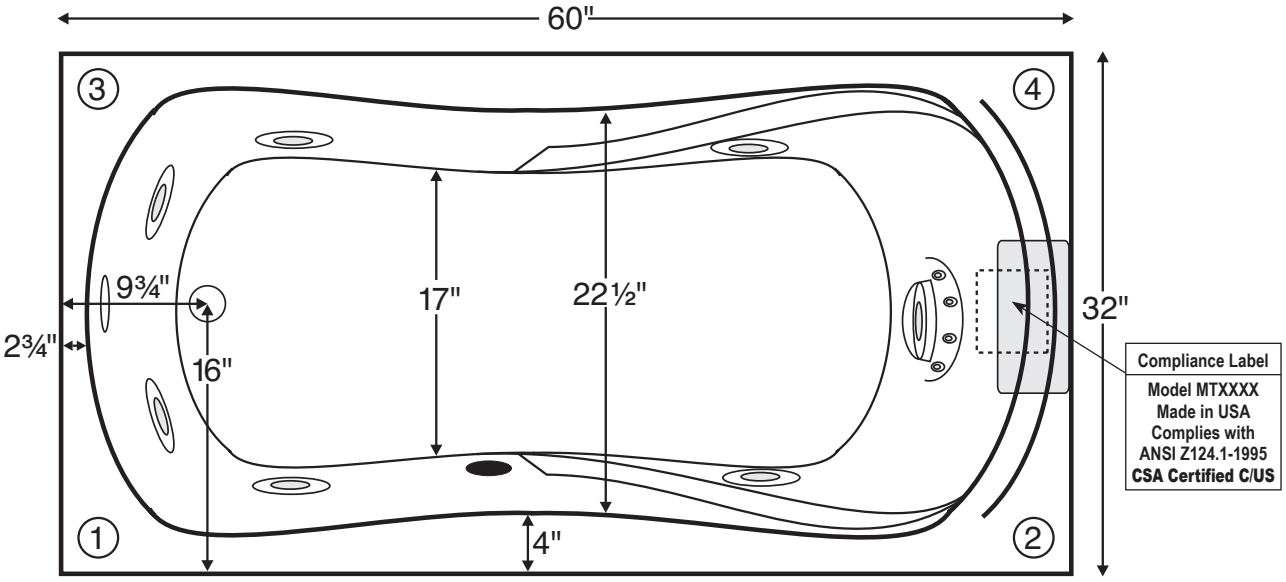

Numbered locations on tub deck are possible Fill-Flush, Hand-Held Shower or Breda locations.

Shown with Ultra-Therapy Package.

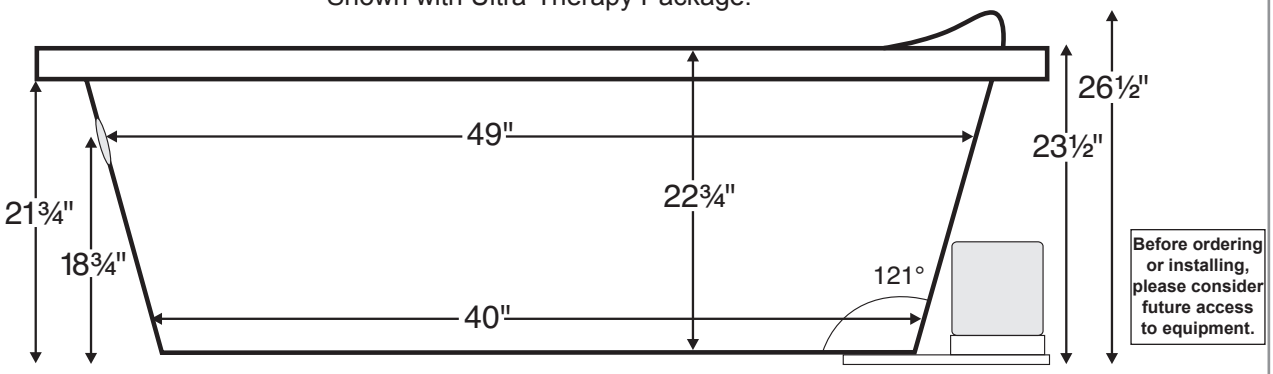

IMPORTANT: If you are planning to use a glass enclosure, MTI must be advised when ordering for possible relocation of controls.

INSTALLATION: Add 1"-3" to height of tub for bedding compound. MTI recommends Quickrete Sand Mix. **Air Baths add approximately 2"-3" to height of tub.** Please measure tub before building tub decking. Suction and control locations may vary. Drawing shows best pump location. Alternate locations available—call MTI for details. Measurements are ± 1/2" and are subject to change without notice. Data herein supersedes all previous prior to publication date shown below. Tubs with more than one pump or blower will require additional service access.

Effective 030109-123109

©2008 by MTI Whirlpools, Inc. Modification Rights Reserved.