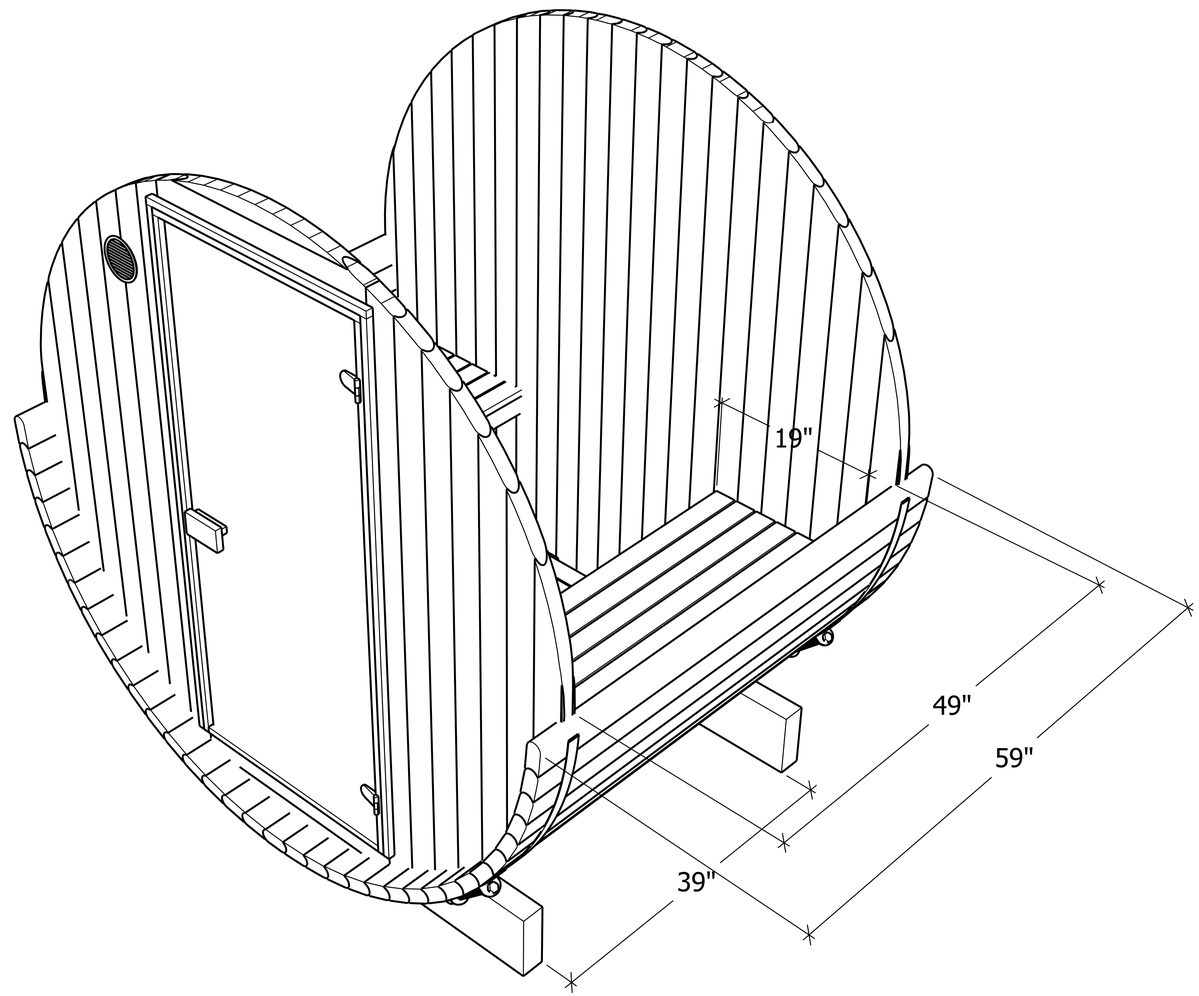
19"
49"
59"
39"