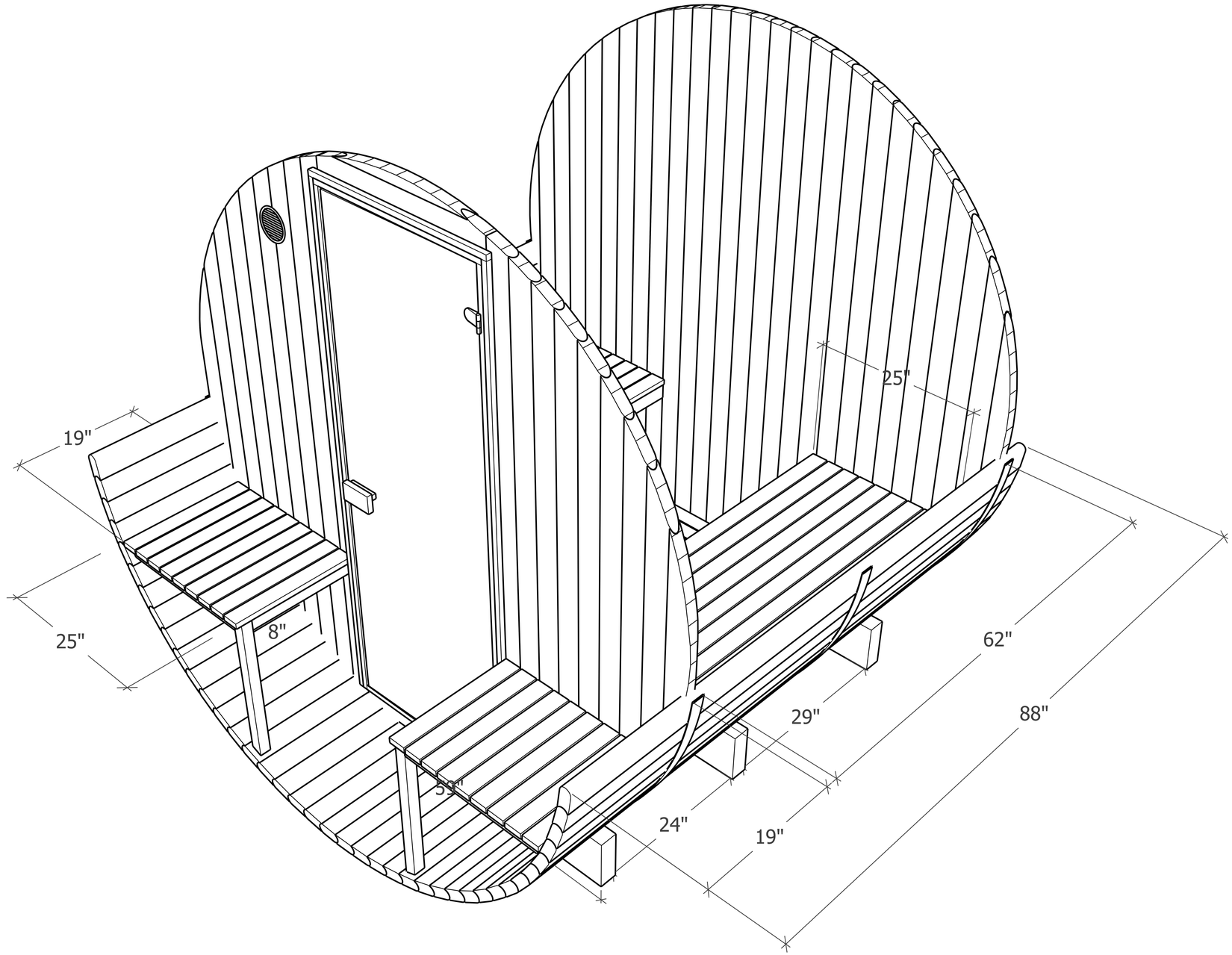
19"
25"
8"
25"
53"
24"
19"
29"
62"
88"